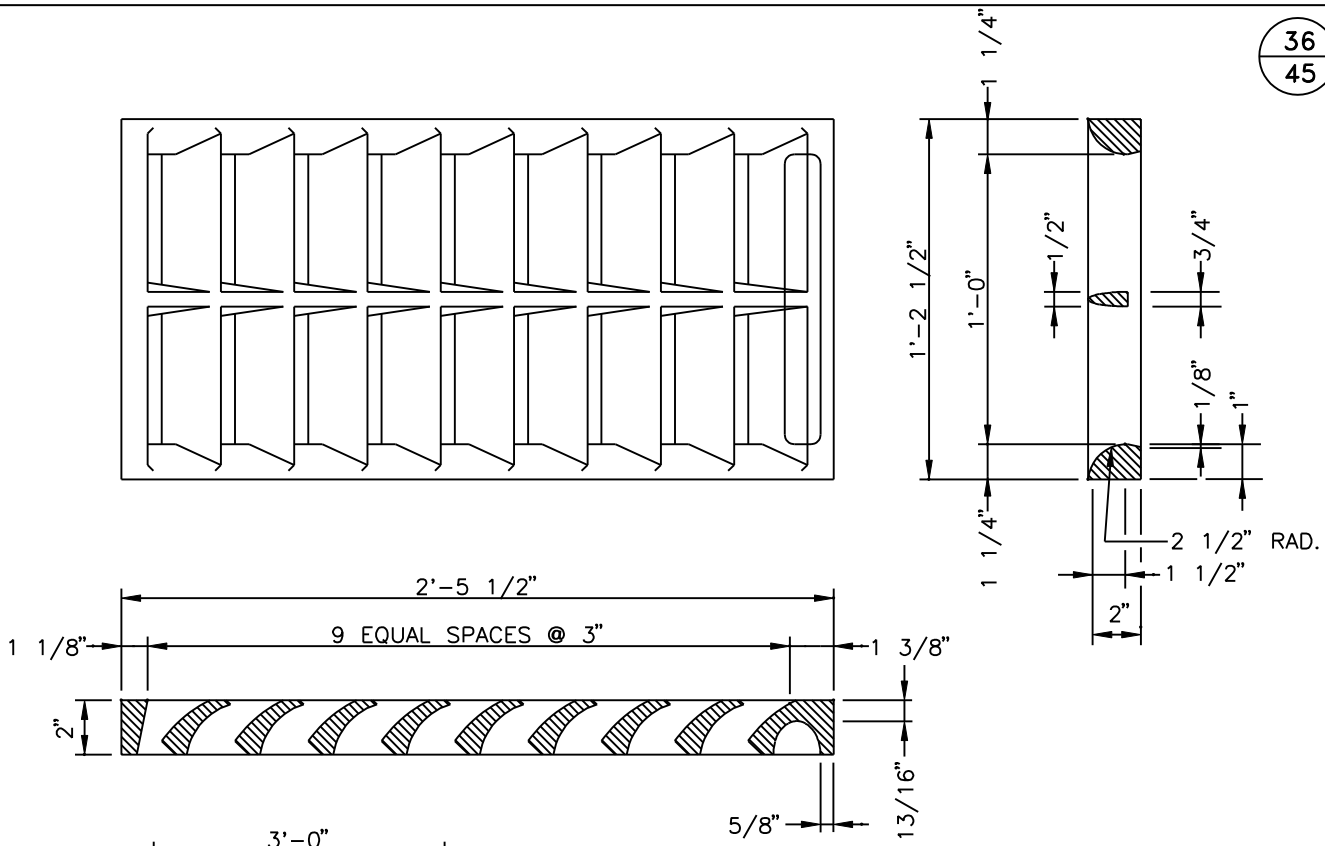

GRATED LID FOR
TYPES C AND E CATCH BASINS

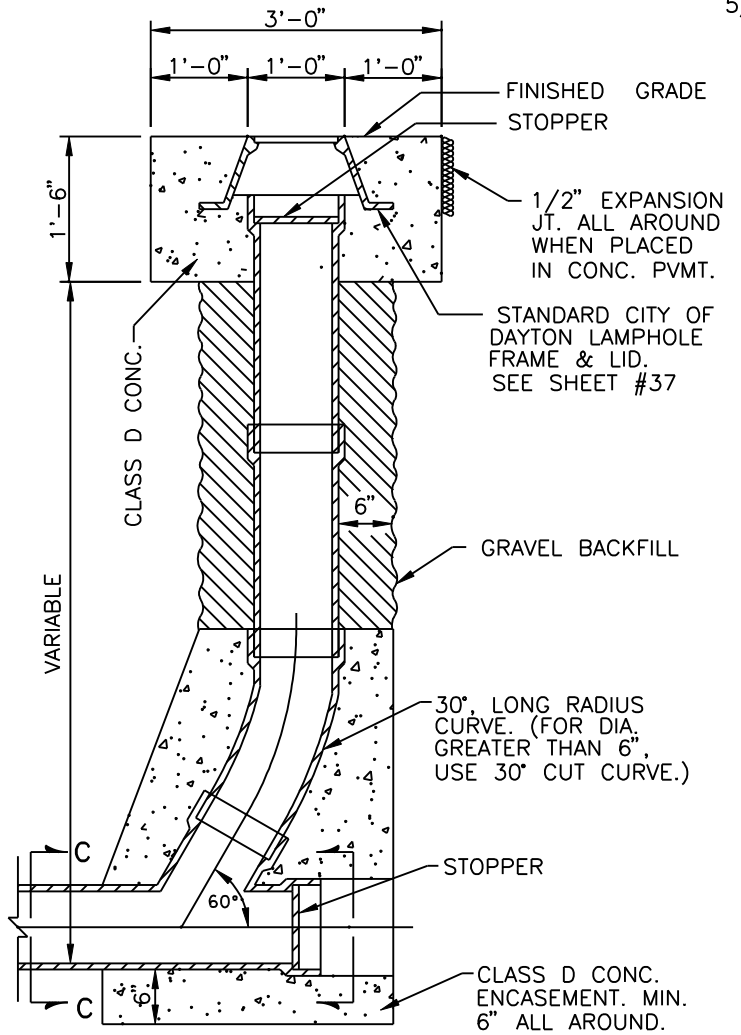

LAMPHOLE

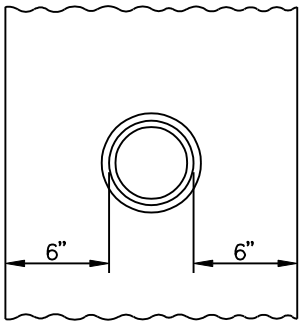

SECTION C–C

REVISIONS	STANDARDS FOR STORM SEWERS LAMPHOLE AND GRATED LID FOR CATCH BASIN TYPE E CITY OF DAYTON, OHIO NO SCALE 14A–17113