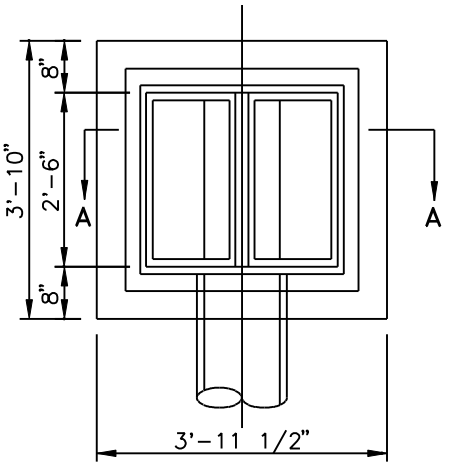

~ PLAN ~
(WITH GRATING REMOVED)

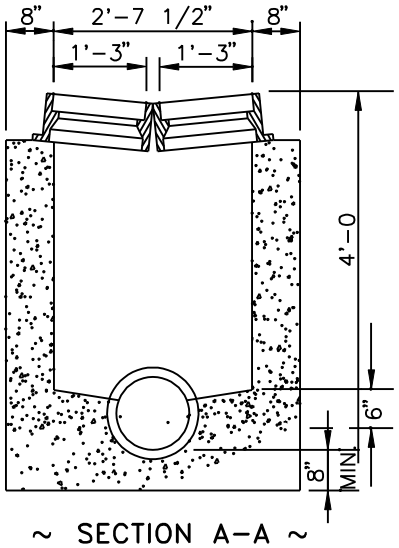

~ SECTION A-A ~

TYPE E
CATCH BASIN

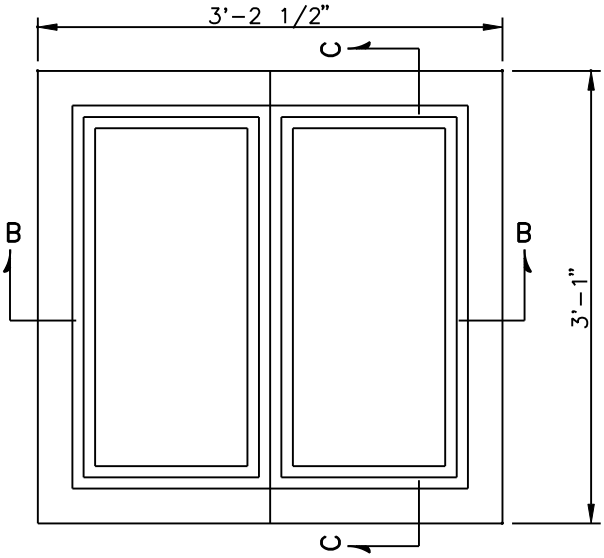

~ PLAN ~

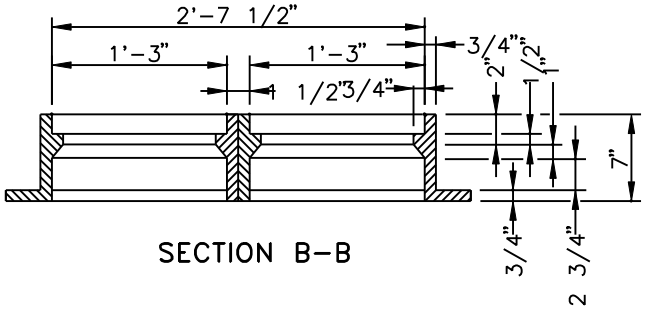

SECTION B-B

FRAME FOR TYPE E
CATCH BASIN

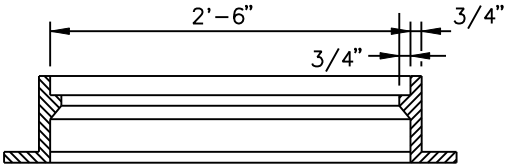

SECTION C-C

REVISIONS	STANDARDS FOR STORM SEWERS CATCH BASIN TYPE E AND CAST IRON FRAME CITY OF DAYTON, OHIO NO SCALE 14A-17113