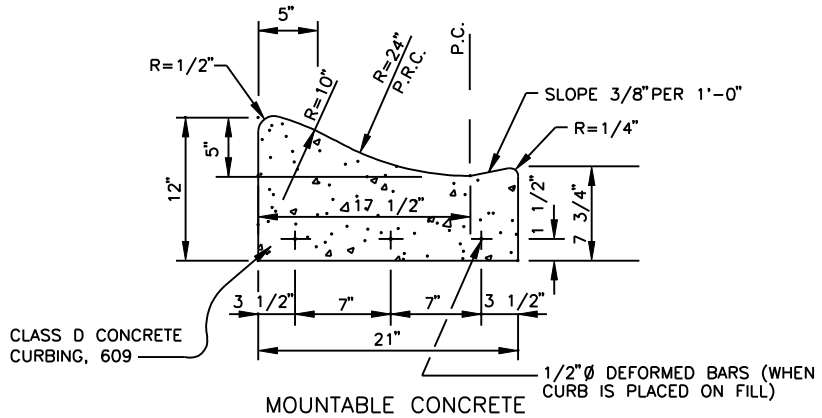

MOUNTABLE CONCRETE
COMBINED CURB & GUTTER
(LOCAL RESIDENTIAL)

CONCRETE CURB
NO SCALE

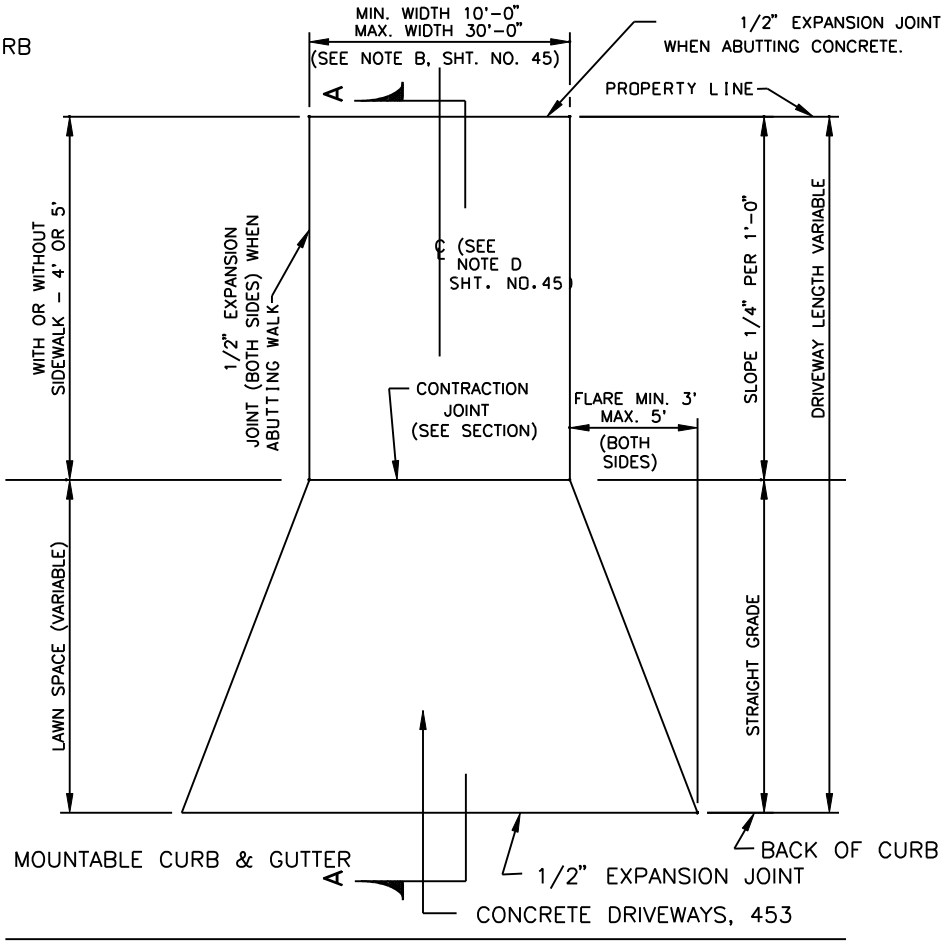

PLAN

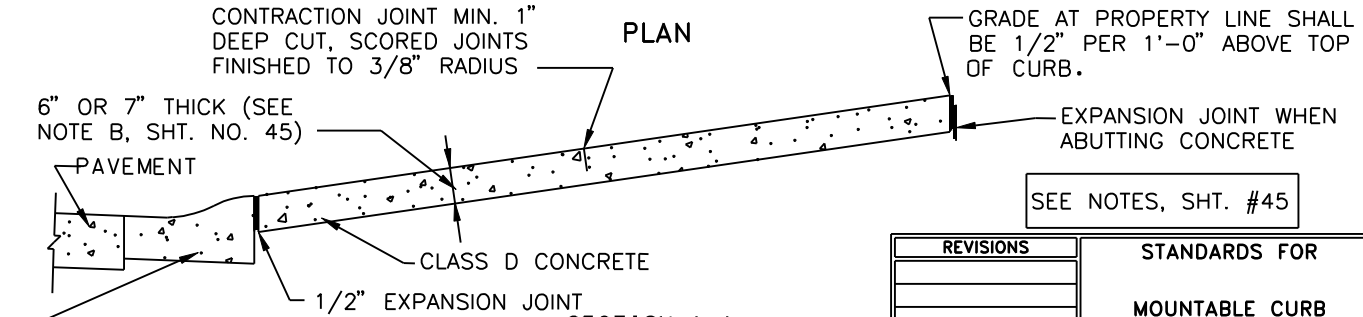

SEE NOTES, SHT. #45

SECTION A-A
CONCRETE DRIVEWAYS
WITH MOUNTABLE CURB & GUTTER
NO SCALE

REVISIONS	STANDARDS FOR
	MOUNTABLE CURB DRIVEWAYS AND CURB DETAILS
	CITY OF DAYTON, OHIO
	NO SCALE 14A-17113