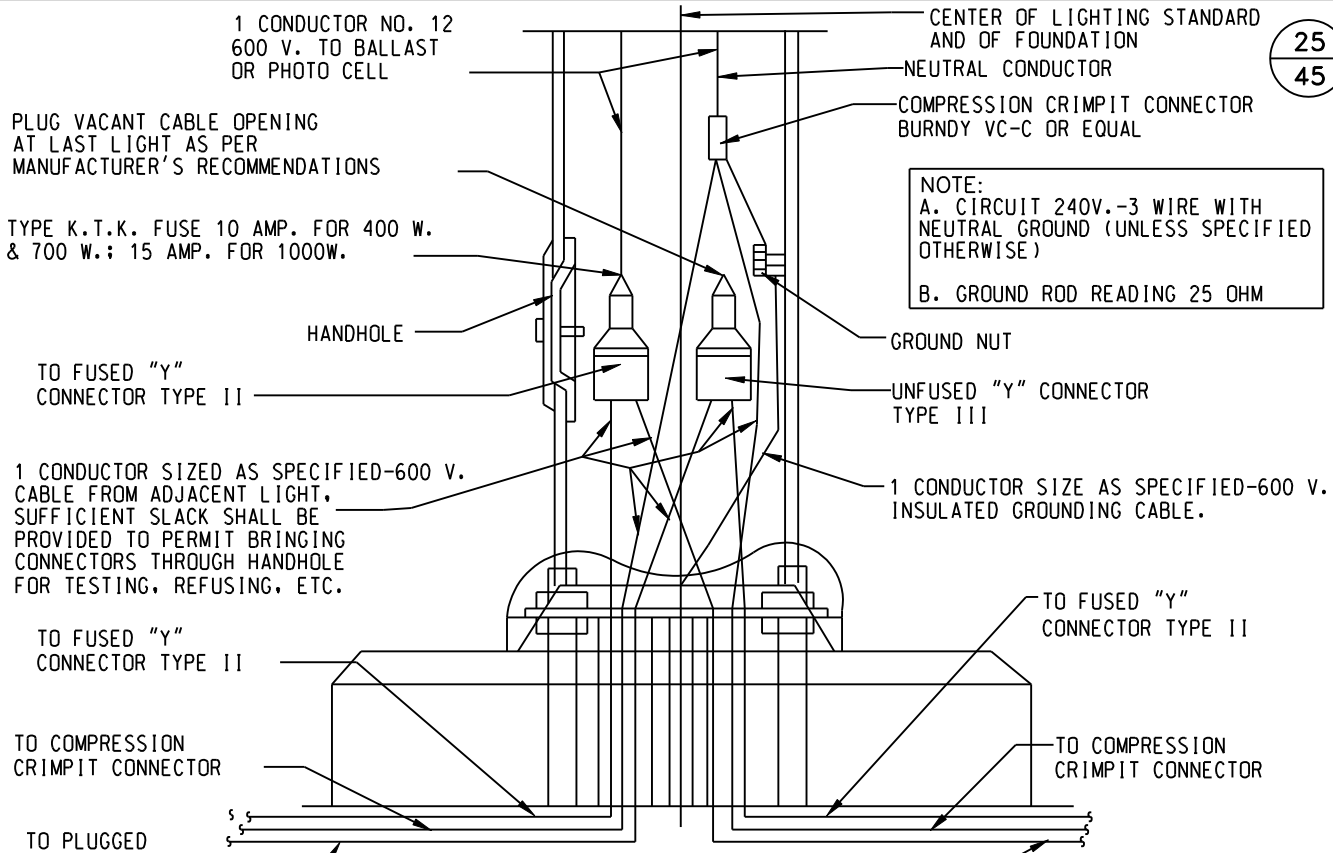

NOTE:
A. CIRCUIT 240V.-3 WIRE WITH NEUTRAL GROUND (UNLESS SPECIFIED OTHERWISE)

B. GROUND ROD READING 25 OHM

CIRCUIT CABLE CONNECTION
AT LIGHT POLE
RESIDENTIAL AND COMMERCIAL AREAS

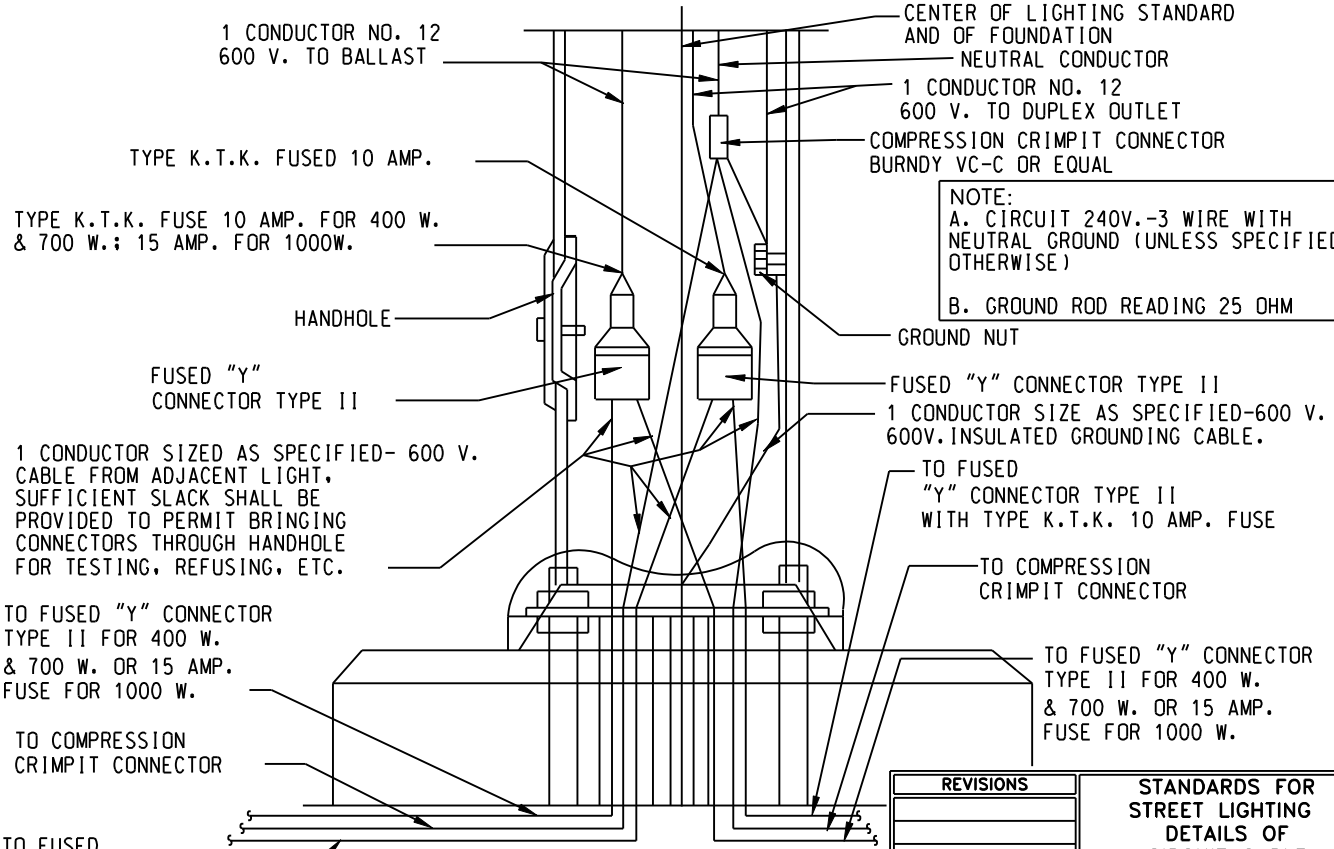

NOTE:
A. CIRCUIT 240V.-3 WIRE WITH NEUTRAL GROUND (UNLESS SPECIFIED OTHERWISE)

B. GROUND ROD READING 25 OHM

CIRCUIT CABLE CONNECTION
AT LIGHT POLE
CENTRAL BUSINESS DISTRICT AREA ONLY

REVISIONS	STANDARDS FOR STREET LIGHTING DETAILS OF CIRCUIT CABLE CONNECTION
	CITY OF DAYTON, OHIO
	NO SCALE 14A-17113