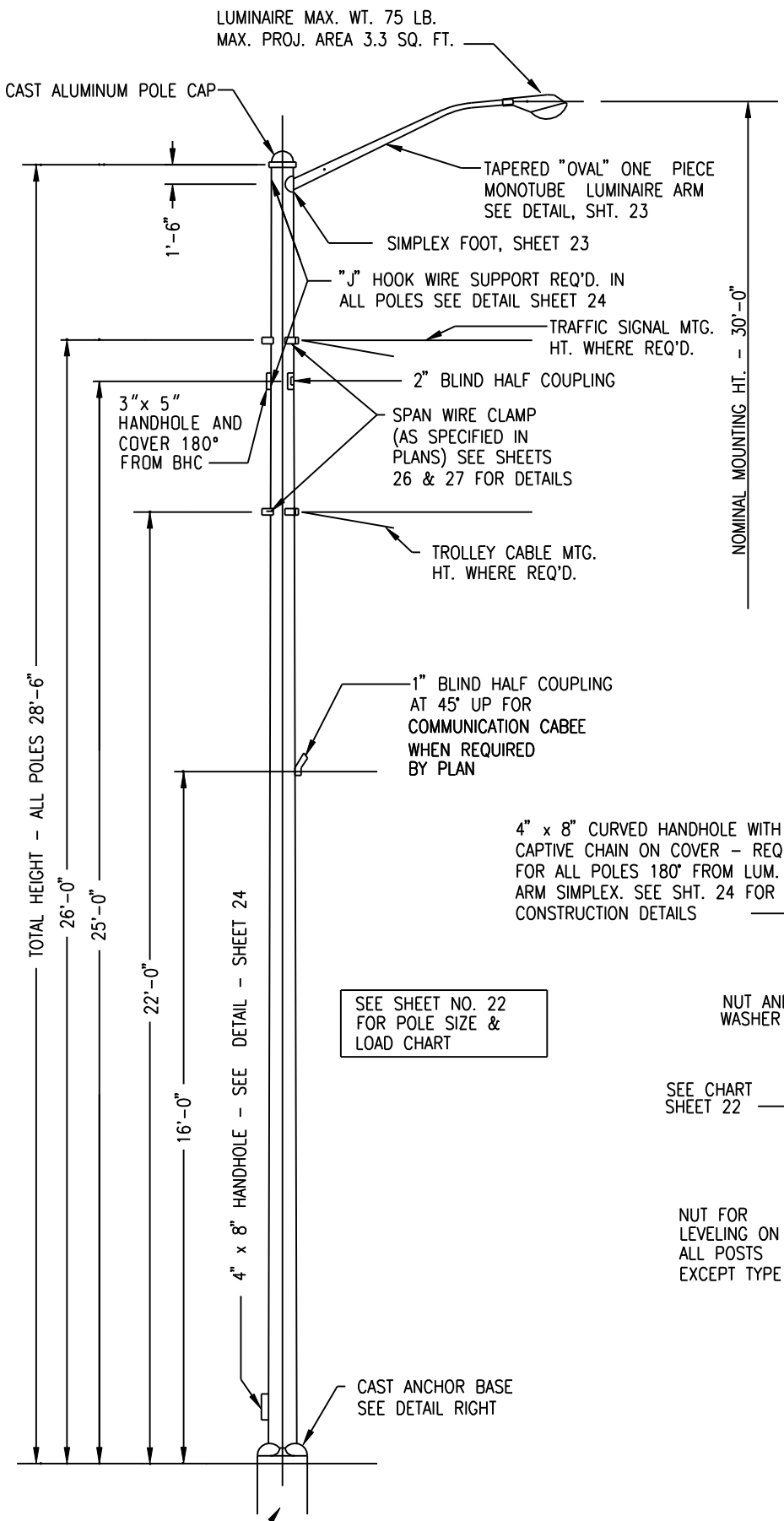

POLE DETAILS

NOTE:
ENTIRE ASSEMBLY TO BE HOT DIP GALV. AFTER FABRICATION.

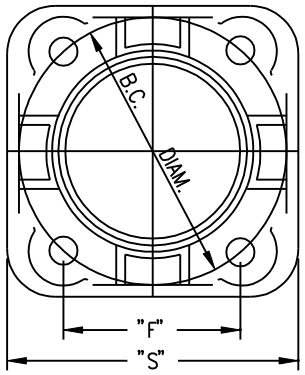

(SEE CHART - SHEET 22)

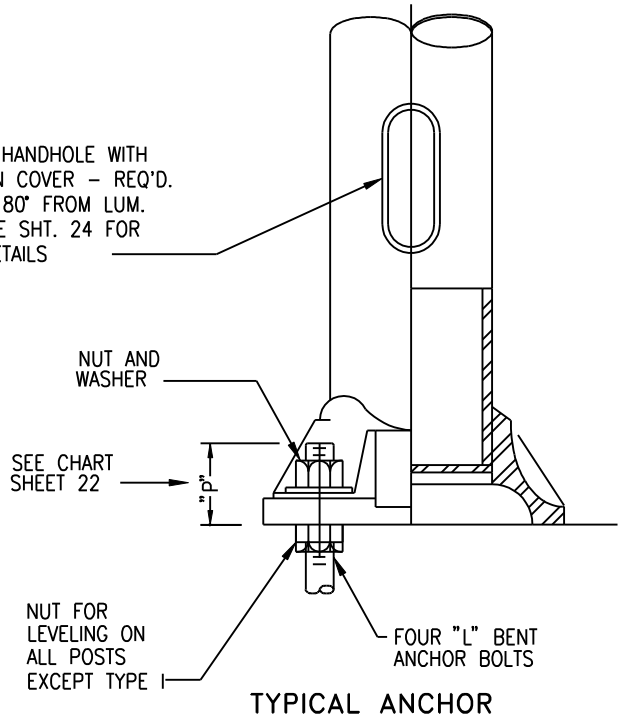

TYPICAL ANCHOR BASE DETAIL

REVISIONS

STANDARDS FOR STREET LIGHTING POLE AND ANCHOR BASE DETAILS

CITY OF DAYTON, OHIO
NO SCALE 14A-17113